Altek®

***VERTIGO COLLECTION** design dai Zurich*

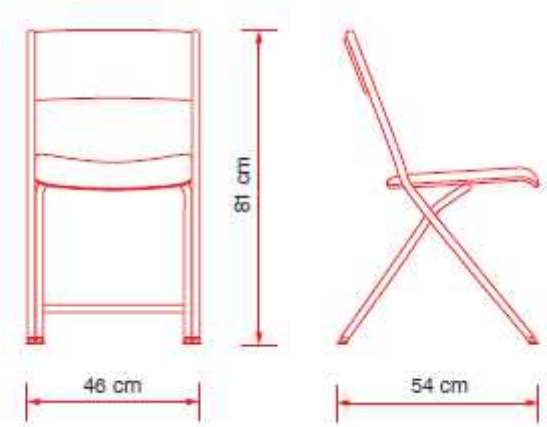

Vertigo LV03
Folding chair
Steel tube structure in chrome or mat chrome or aluminum painted finish. Seat and back in polypropylene black, charcoal, light grey or blue.
Optional: trolley to carry 20/40 chairs, connecting device

***height:** 81 cm*
***width**: 46 cm*
***depth:** 54 cm*
gross weight: kg. 4.25
net weight: kg. 4
vol.: 0.18 cbm

ALTEK ITALIA DESIGN SRL Via Vegri,40 36010 Zanè (VI) www.altekitaliadesign.it info@altekitaliadesign.it +39.0445.316500